Mechanical Cam Switches

BNS 819-99-R-11
Order Code: BNS004U

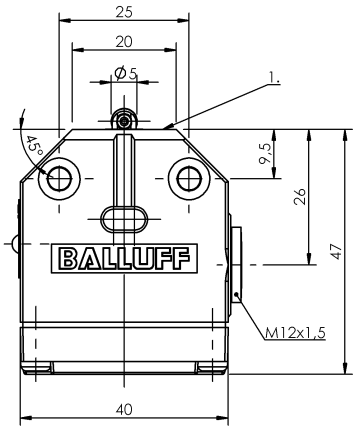

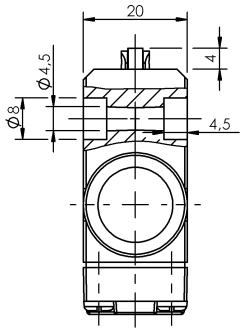

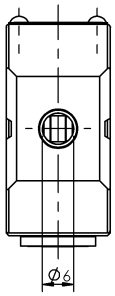

1) Reference edge

Basic features

Approval/Conformity	CE UKCA CCC WEEE
Basic standard	IEC 60947-5-1
Operating principle	1. Switch position: Mechanical
Version	Snap contact

Display/Operation

Function indicator	1. Switch position: None

Electrical connection

Connection type	1. Switch position: Screw terminal

Electrical data

Continuous current	1. Switch position: 5 A
Rated operating voltage Ue	1. Switch position: 250 V AC
Switching function mechanical	Single-pin changeover
Switching rate	1. Switch position: 200/min

Environmental conditions

Ambient temperature	-5...85 °C
IP rating	IP67

Functional safety

B10d (EN ISO 13849-1)	BSE 70.1: 10 mil. switching cycles

Material

Housing material	Aluminium, Anodized
Housing material, surface protection	Anodized
Material contacts	1. Switch position: Silver
Plunger material	1. Switch position: 1.4034 stainless steel

Mechanical data

Approach direction	lateral or at right angles to mounting surface
Approach speed	1. Switch position: 60 m/min
Dimension	40 x 20 x 47 mm
Distance cam - reference edge	1. Switch position: 2.30...2.80 mm
Flange, feed-through	None
Installation	any
Life expectancy mechanical	1. Switch position: 10 mil. switching operations
Number of switching positions	Roller Mechanical
Plunger spacing 1st switch position	10 mm
Plunger style	1st switch position: Roller
Switch actuation force	1. Switch position: 8 N
Switching element	1. Switch position: BSE 70.1

Range/Distance

Repeatability	1. Switch position: ±0.05 mm
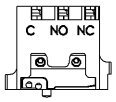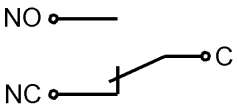
Wiring Diagrams (Schematic)