SIEMENS

Data sheet 5SV3312-6

Siemens EcoTech



Residual current operated circuit breaker, 2-pole, type A, In: 25 A, 30 mA, Un AC: 230 V

Model	
product brand name	SENTRON
product designation	Residual current operated circuit breaker
design of the product	Instantaneous
product type designation	5SV3
General technical data	
number of poles	2
size of installation devices according to DIN 43880	1
mechanical service life (operating cycles) typical	10 000
short-circuit current of series fuse maximum permissible	63 A
short-circuit current rating	10 kA
switching function short-term delayed	No
degree of pollution	2
insulation voltage (Ui) rated value	2 000 V
tripping fault current rated value	30 mA
let-through current permissible	5 200 A
I2t value permissible	58 000 $A^2 \cdot s$
Supply voltage	
supply voltage for testing equipment minimum	195 V
value range of the supply voltage frequency	50 Hz
value range of the operating frequency	50 Hz
value range of the supply voltage at AC	230 V
Protection class	
protection class IP	IP20, if the distribution board is installed, with connected conductors
Breaking Capacity	
switching capacity current	
● according to IEC 61008-1 rated value	0.5 kA
grid spacing	60 mm
Dissipation	
power loss [W]	
● for rated value of the current at AC in hot operating state per pole	1 W
● maximum	2 W
Appearance	
RAL color number	7 035
RAL color number (similar)	7 035

Subject to change without notice
© Copyright Siemens

Product details	
product feature silicon-free	Yes
product extension installable supplementary devices	Yes
Connections	
connectable conductor cross-section solid	
• minimum	0.75 mm²
• maximum	35 mm²
connectable conductor cross-section stranded	
• minimum	0.75 mm²
• maximum	35 mm²
tightening torque with screw-type terminals	
• minimum	2.5 N·m
• maximum	3 N·m
position of power supply cord	top or bottom
Mechanical Design	
height	90 mm
width	36 mm
depth	70 mm
installation depth	70 mm
number of modular width units	2
fastening method	DIN rail
mounting position	any
Net Weight	187 g
Environmental conditions	
ambient temperature during operation	
• minimum	-25 °C
• maximum	45 °C
ambient temperature during storage minimum	-40 °C
number of test cycles for environmental testing according to IEC 60068-2-30	28

Approvals Certificates

Environment				General Product Approval	
EPD	Siemens EcoTech	Environmental Con-firmations	Environmental Con-firmations	CCC	Confirmation

General Product Approval					
CE EG-Konf.	IMQ	ÖVE	VDE	Miscellaneous	EAC

EMV	Test Certificates	other		Railway	Dangerous goods
RCM	Miscellaneous	产品合格 QC PASS	Confirmation	Special Test Certific-ate	Transport Information

Further information

Information on the packaging
https://support.industry.siemens.com/cs/ww/en/view/109813875
Information for data generation and storage
https://support.industry.siemens.com/cs/ww/en/view/109995012
Information- and Downloadcenter (Catalogs, Brochures,…)
https://www.siemens.com/lowvoltage/catalogs
Industry Mall (Online ordering system)
https://mall.industry.siemens.com/mall/en/en/Catalog/product?mlfb=5SV3312-6

Subject to change without notice
© Copyright Siemens

Service&Support (Manuals, Certificates, Characteristics, FAQs,...)
https://support.industry.siemens.com/cs/ww/en/ps/5SV3312-6
Image database (product images, 2D dimension drawings, 3D models, device circuit diagrams, ...)
https://www.automation.siemens.com/bilddb/cax_en.aspx?mlfb=5SV3312-6
CAx-Online-Generator
https://www.siemens.com/cax
Tender specifications
https://www.siemens.com/specifications
Characteristic curves
https://curves.simaris.siemens.com/curves/<mmp_prod_noCOMP="HAUPT"></mmp_prod__no>

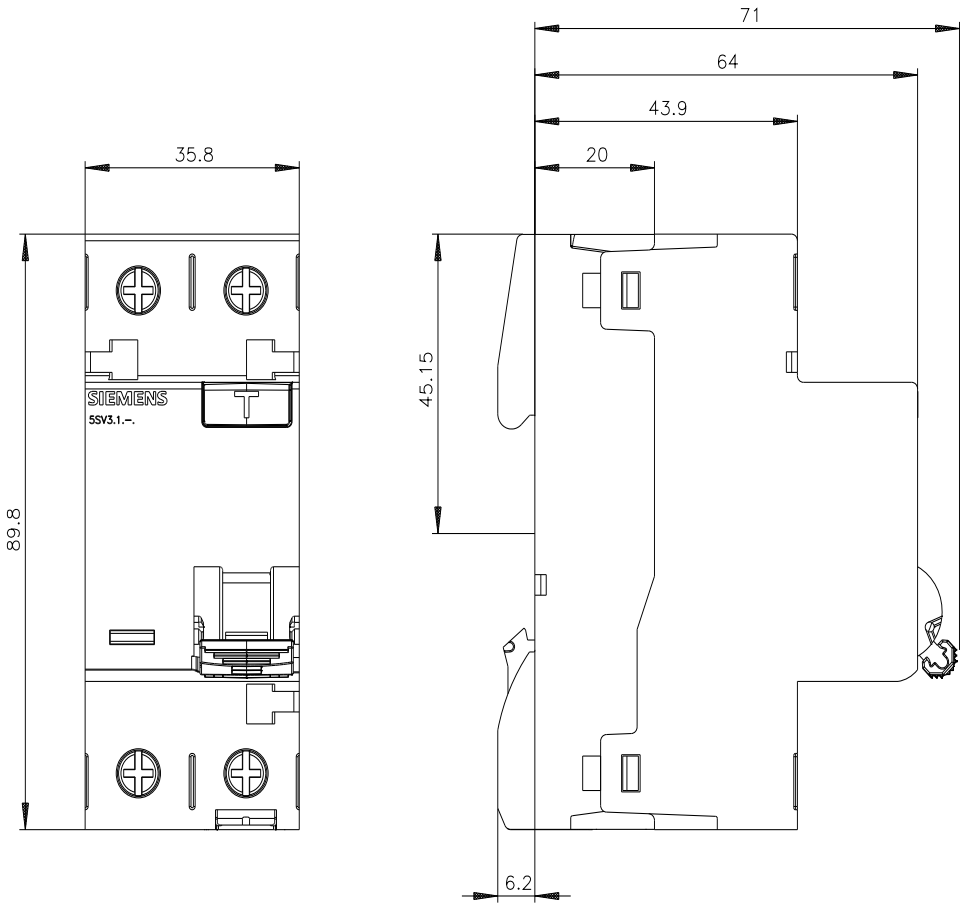

© Copyright Siemens

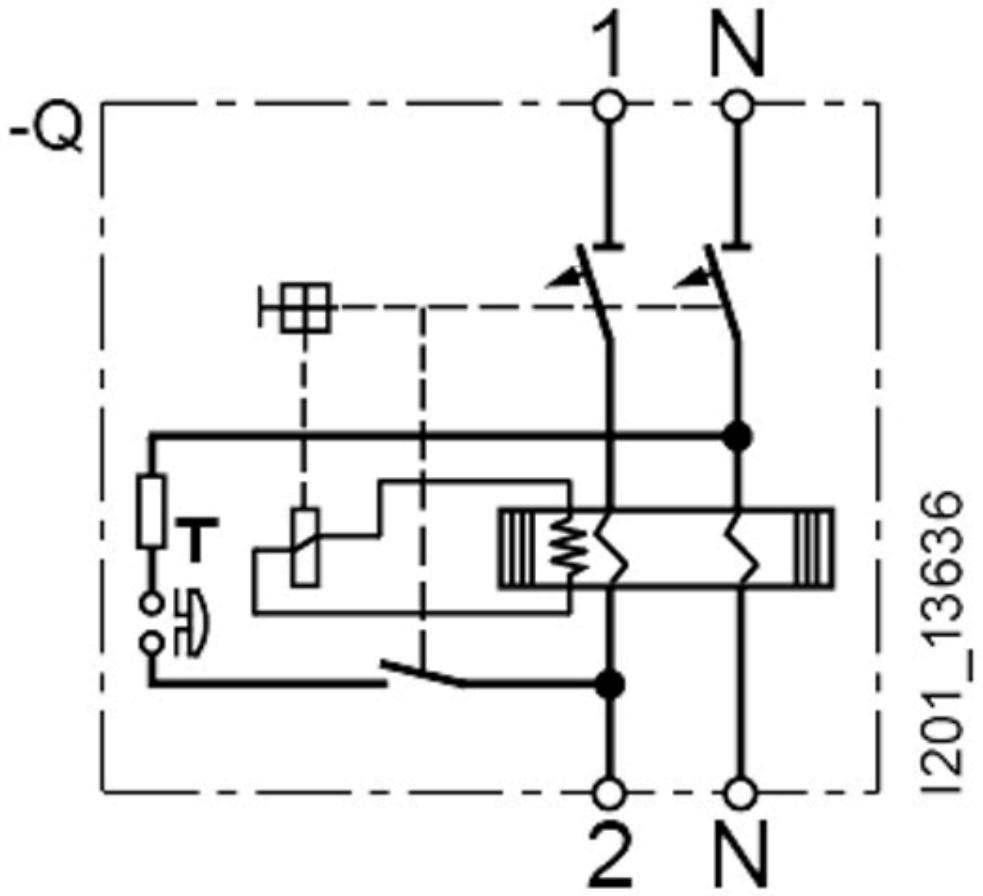

-CB

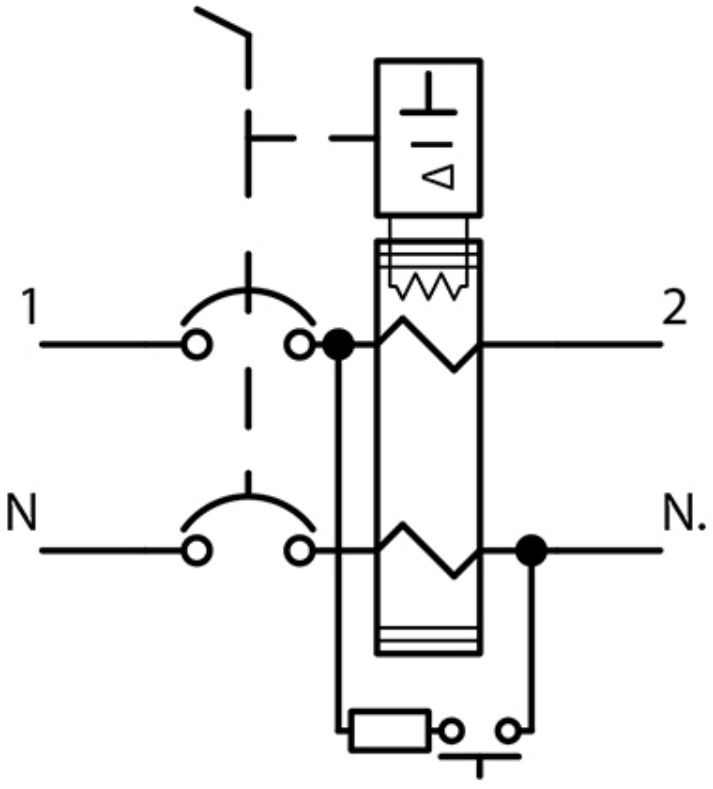

last modified: 10/9/2025

Subject to change without notice
© Copyright Siemens

Subject to change without notice
© Copyright Siemens